Guidelines for the Use of Digital Content in Accreditation Visits

2020 Conditions for Accreditation

April 22, 2021

NAAB

National Architectural Accrediting Board, Inc.

© 2021 by the National Architectural Accrediting Board. All Rights Reserved.

Contents

Introduction 3
File Type, Size, and Legibility 4
File Type 4
File Size 4
Legibility 4
Organizing Digital Content 5
File Organization 5

Introduction

Welcome to the NAAB's "Guidelines for the Use of Digital Content in Accreditation Visits." This document was first published in response to increased interest from programs that wanted to present digital content in visits. When first published, the inclusion of digital content was optional, but due the COVID-19 pandemic, and the NAAB's decision to conduct visits virtually, the NAAB now requires digital content in all accreditation visits. Refer to the 'NAAB Virtual Visit Supplement to the *2020 Procedures for Accreditation*.'

As with earlier editions, these guidelines are a minimum level. Programs with sufficient resources, technological support, and ambition are welcome to go above and beyond these guidelines, but they should communicate their intent to do so with the team chair. This will ensure that visiting teams receive adequate training and have a good understanding of how the digital content will be organized and presented.

We hope you find these guidelines useful and thank you for helping to move the accreditation process forward! The NAAB welcomes your feedback on the guidelines at accreditation@naab.org.

File Type, Size, and Legibility

File Type

Files must be accessible on multiple operating systems and should not be in an editable form. All static documents, including text and images, must be presented as PDFs. Videos must be a file type that can be viewed on any machine and operating system.

File Size

A maximum file size of 15 mb is mandated, but programs should consider this simple concept: **speed of access is just as important as image quality**. Files and their embedded images should not be slow to load, and downsizing files and images should not be at the detriment of legibility.

Best practices for file size

- Photoshop files should be flattened.
- Vector line files should not be rasterized for legibility.

Legibility

Image legibility and file size go hand in hand. As evidence for accreditation, it is imperative that all images, and enlarged detail images, are legible. Original file format plays a part in this. If an original file is formatted for 8 ½" x 11" paper, a reviewer will not need to zoom in and out as frequently as an original file formatted for 34" x 44". Please consider that visiting team members may be reviewing evidence on a single laptop screen between 13-15" (the most common screen sizes).

Best practices for legibility

- Can you see the parts and pieces of an image when it is blown up on the screen?
- Are large drawings legible if zoomed to see the individual parts?

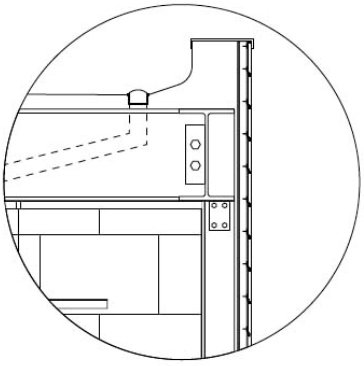

Vertigo wood plastic composite cladding
section assembly details
1/2" = 1'

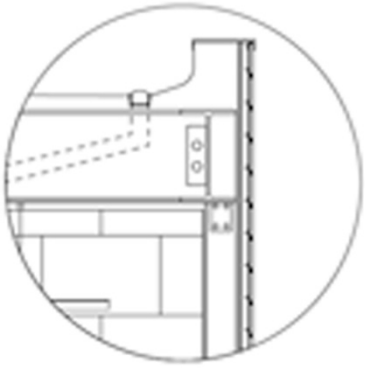

Vertigo wood plastic composite cladding
section assembly details
1/2" = 1'

Organizing Digital Content

The program director will inform the team chair on how the content for review will be provided to the visiting team. Several options are available:

- File hosting service (i.e., Dropbox, Google Drive) with a downloadable desktop app, so that files are accessible through Apple Finder or Windows Explorer
- Learning management software with individual user accounts created for each team member (i.e., Blackboard, Canvas)
- Password-protected school-administered platform (i.e., virtual private network)

File Organization

1. Create a 'base folder' titled "**Documentation**" with evidence in support of the Program Criteria (PC) and Student Criteria (SC). The Documentation folder should contain:
    a. A PDF of the Architecture Program Report (APR).
    b. For institutions with one NAAB-accredited program:
        i. A PDF of the PC/SC Matrix.
        ii. Two folders: "**3.1 Program Criteria**" and "**3.2 Student Criteria**."
    c. For institutions with two NAAB-accredited programs, two folders: "**B.Arch.**" and "**M.Arch.**"
        i. The B.Arch. and M.Arch. folders should each contain two folders: "**3.1 Program Criteria**" and "**3.2 Student Criteria**."
        ii. The B.Arch. and M.Arch. folders should each contain a PDF of the PC/SC Matrix for the program.

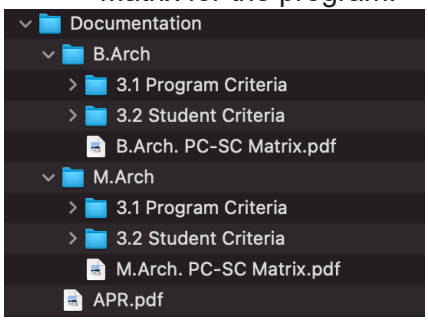

2. Inside "3.1 Program Criteria" create a folder for each criterion.
    a. Inside each PC criterion folder, provide the supporting materials and evidence of assessment required to demonstrate compliance, organizing with additional sub-folders as needed.
        i. For curricular activities, organize the evidence using the file structure identified below for 3.2 Student Criteria.
        ii. For non-curricular activities, include a sub-folder of each activity referenced in the PC matrix that led to the achievement of the criterion, with supporting, aggregated data.
3. Inside '3.2 Student Criteria', create a folder for each criterion.
    a. Inside each SC criterion folder, create a 'course folder' for each course where evidence of compliance is demonstrated.
        i. Name Each folder, "**Course Number_Course Name**."
        ii. Inside each course folder create PDFs with appropriate file names such as "**Course Number_Syllabus.pdf**," "**Course Number_Schedule.pdf**," and "**Course Number_Short Description.pdf**."

b. Inside each SC criterion folder, create an "**Assessment**" folder. This folder will contain evidence of the holistic assessment method(s) described in the APR for each criterion.
c. For student work required in SC.5 and SC.6, programs should create two folders inside the criterion folder: "**Student Work_NAAB Selected**" and "**Student Work_Program Selected**."
    i. In each student work folder, create one PDF for each student's work for each course. Name each PDF "**Last name_First name_Course Number**" or "**Student ID#_Course Number**." The PDF should contain all the student's work from that course that demonstrates compliance.
    ii. For group work, include a description of individual student contribution to the group work in each student work PDF.

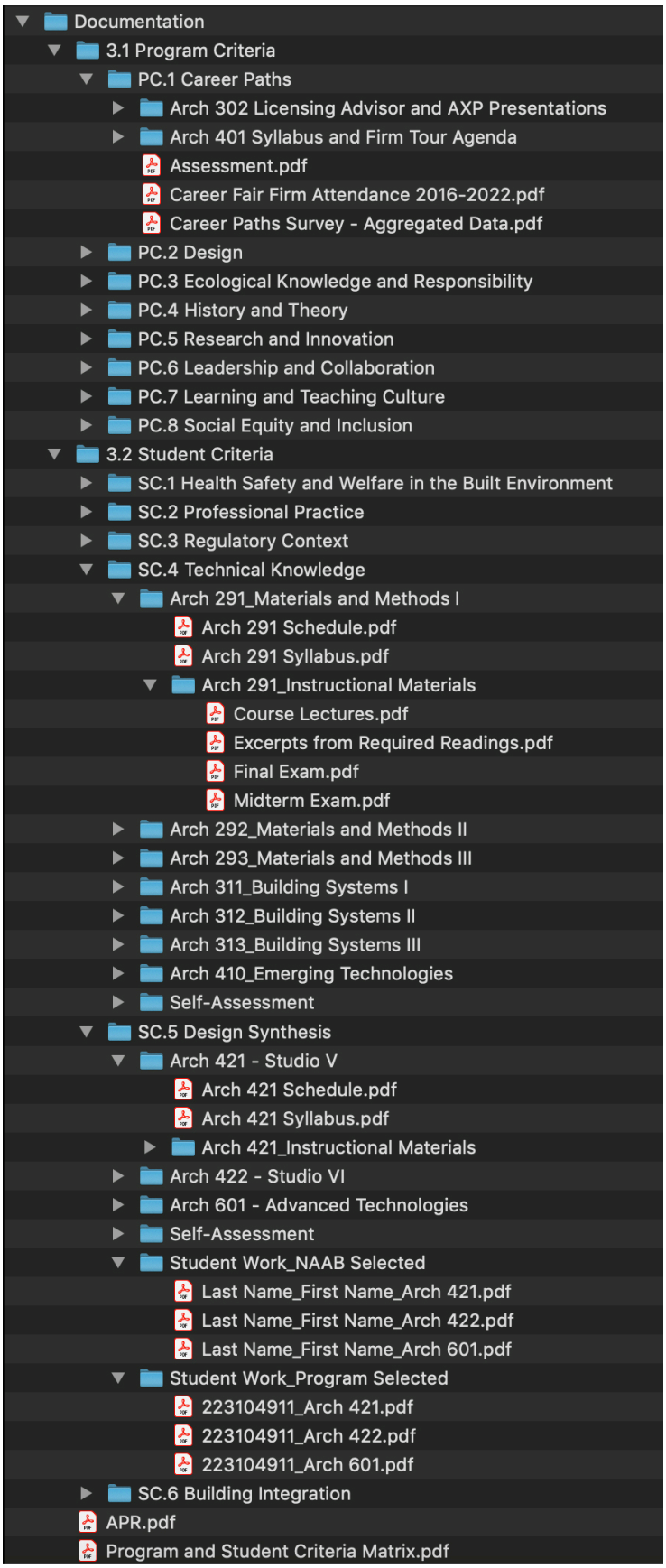
Documentation
3.1 Program Criteria
PC.1 Career Paths
Arch 302 Licensing Advisor and AXP Presentations
Arch 401 Syllabus and Firm Tour Agenda
Assessment.pdf
Career Fair Firm Attendance 2016-2022.pdf
Career Paths Survey - Aggregated Data.pdf
PC.2 Design
PC.3 Ecological Knowledge and Responsibility
PC.4 History and Theory
PC.5 Research and Innovation
PC.6 Leadership and Collaboration
PC.7 Learning and Teaching Culture
PC.8 Social Equity and Inclusion
3.2 Student Criteria
SC.1 Health Safety and Welfare in the Built Environment
SC.2 Professional Practice
SC.3 Regulatory Context
SC.4 Technical Knowledge
Arch 291_Materials and Methods I
Arch 291 Schedule.pdf
Arch 291 Syllabus.pdf
Arch 291_Instructional Materials
Course Lectures.pdf
Excerpts from Required Readings.pdf
Final Exam.pdf
Midterm Exam.pdf
Arch 292_Materials and Methods II
Arch 293_Materials and Methods III
Arch 311_Building Systems I
Arch 312_Building Systems II
Arch 313_Building Systems III
Arch 410_Emerging Technologies
Self-Assessment
SC.5 Design Synthesis
Arch 421 - Studio V
Arch 421 Schedule.pdf
Arch 421 Syllabus.pdf
Arch 421_Instructional Materials
Arch 422 - Studio VI
Arch 601 - Advanced Technologies
Self-Assessment
Student Work_NAAB Selected
Last Name_First Name_Arch 421.pdf
Last Name_First Name_Arch 422.pdf
Last Name_First Name_Arch 601.pdf
Student Work_Program Selected
223104911_Arch 421.pdf
223104911_Arch 422.pdf
223104911_Arch 601.pdf
SC.6 Building Integration
APR.pdf
Program and Student Criteria Matrix.pdf